**VCA Headquarters**
1 The Eastgate Office Centre
Eastgate Road
Bristol, BS5 6XX
United Kingdom

Switchboard: +44 (0) 117 951 5151
Direct line: +44 (0) 117 952
Main Fax: +44 (0) 117 952 4103
Email: enquiries@vca.gov.uk
Web: www.vca.gov.uk

THE UNITED KINGDOM VEHICLE APPROVAL AUTHORITY

Rev 1/03

E11

COMMUNICATION CONCERNING THE APPROVAL GRANTED OF A TYPE OF DAYTIME RUNNING LAMP PURSUANT TO ECE REGULATION NO: 87

Approval No: 000001

1. Trade name or mark of the device:
   Trade name: SIJ
   Trade mark: SiJ

2. Manufacturer's name for the type of device: SJ-285E

2. Manufacturer's name and address:

   Mycarr Lighting Technology Company Limited
   1, Lane 174, Jung Young Road
   Chang Hwa Hsiang
   Taiwan
   Republic of China

4. If applicable, name and address of the manufacturer's representative: Not applicable

5. Submitted for approval on: 8 June 2006

6. Technical service responsible for conducting approval tests: Vehicle Certification Agency

7. Date of test report issued by that service: 29 June 2006

8. Number of test report issued by that service: EAG076982

9. Concise description:

Number and category of filament lamps: 1 x H3 12V 55W

Geometric conditions of installation and relating variations, if any: Not applicable

10. Position of the approval mark: On the lens

11. Reason(s) for extension (if applicable): Not applicable

12. Approval GRANTED

13. Place: BRISTOL

14. Date: 4 JULY 2006

15. Signature:

A. W. STENNING
Head of Product Certification

16. The following documents, bearing the approval number shown above, are available on request:

EAG076982

[3]/ For daytime running lamps with non-replaceable light sources indicate the number and total wattage of the light sources used.


Tel:886-4-24061011 Fax:886-4-24060419 E-mail:isoqa@ms12.hinet.net http:www.isoqa.com.tw

Vehicle Certification Agency

Far East Office

英國車輛驗證局遠東辦事處 建維驗證

| VCA REFERENCES | |
|---|---|
| Test Report Number | **EAG076982** |
| Number of Pages | **3** |
| Number of Annexes | **3** |

| TEST DETAILS | |
|---|---|
| Subject | **Daytime Running Lamp details listed as Category** |
| Specific Requirements | **ECE Reg. 87.00** |
| Duration | **2006/6/8** |
| Technical Service | **Integrated Service of Quality Assessment for Vehicle Certification Agency** |
| VCA Representative | **ARTHUR C. H. CHANG** |
| Manufacturer's Representative | **JACK SHY** |
| Reason for Test | **Type of Approval** |

| MANUFACTURER DETAILS | |
|---|---|
| Manufacturer's Name | **MYCARR LIGHTING TECHNOLOGY COMPANY LIMITED** |
| Manufacturer's Address | **1, Lane 174, Jung Young Road, Chang Hwa Hsiang, Taiwan, R.O.C.** |
| Premise of Manufacturing | **Same As Above** |
| Model Type & description | **SJ-285E** |
| Category | **RL for Daytime Running Lamp.** |
| **CONCLUSION** | **The submitted samples are tested in accordance with Specific Requirements and found in compliance with all aspects.**<br>**Signature:**<br>Archer Chang<br>**Name: ARTHUR C H CHANG**<br>**Position: COE of ISOQA**<br>**Date: 29 June 2006** |

LIST OF ANNEXES

| Annex | Total page | Subject | Reference |
|---|---|---|---|
| 1 | 1 | **Information document** | **SJ-285E** |
| 2 | 3 | **Drawings** | **SJ-285E** |
| | | **PHOTO** | |
| 3 | 2 | **Test Record** | **06-0158** |
| 4 | | | |

04-Jul-06

UK Approval Authority


Tel:886-4-24061011 Fax:886-4-24060419 E-mail:isoqa@ms12.hinet.net http:www.isoqa.com.tw

# ECE REGULATION NO.87

| item | Parameter | RESULTS | | YES/NO |
|---|---|---|---|---|
| **6.** | **GENERAL SPECIFICATIONS** | | | |
| 6.1. | Each lamp shall conform to the specifications set forth in the paragraphs below. | | | **YES** |
| 6.2. | Daytime running lamps shall be so designed and constructed that in normal use, despite the vibration to which they may then be subjected, they continue to function satisfactorily and retain the characteristics prescribed by this Regulation. | | | **YES** |
| 6.3. | Light source module | | | **N/A** |
| 6.3.1. | The design of the light source module(s) shall be such that even in darkness the light source module(s) can be fitted in no other position, but the correct one. | | | **N/A** |
| 6.3.2. | The light source module(s) shall be tamperproof | | | **N/A** |
| **7.** | **INTENSITY OF LIGHT** | **S1** | **S2** | |
| 7.1. | The intensity of the light emitted by each lamp shall not be less than 400 cd in the axis of reference. | **465.40** | **473.20** | **YES** |
| 7.2. | Outside the reference axis, in each direction corresponding to the points in the light distribution table reproduced in annex 3 to this Regulation, the intensity of the light emitted by each lamp shall be not less than the product of the minimum specified in paragraph 7.1. above by the percentage specified in the said table for the direction in question. | | | **YES** |
| 7.3. | The intensity of the light emitted shall be not more than 800 cd in any direction. | **Please see Record No. 06-0158 attached.** | | **YES** |
| 7.4. | In the case of a lamp containing more than one light source the lamp shall comply with the minimum intensity required when any one light source has failed and when all light sources are illuminated the maximum intensity shall not be exceeded. | | | **YES** |
| 8. | **ILLUMINATING SURFACE** The area of the illuminating surface shall be not less than 40 $cm^2$. | **41.54 $cm^2$** | | **YES** |
| 9. | **COLOUR OF LIGHT** The colour of the light emitted inside the field of the light distribution grid defined at paragraph 3. of annex 3 shall be white. It shall be measured by using a source of light at a colour temperature of 2856 K (corresponding to illuminant A of the International Commission on Illumination, CIE). However, for lamps equipped with nonreplaceable light sources (filament lamps and other), the colorimetric characteristics should be verified with the light sources present in the lamp, in accordance with paragraph 10.2. of this Regulation. The colour of the light emitted inside the light distribution grid defined at paragraph 5. of annex 3 must be within the limits of the trichromatic co-ordinates prescribed in annex 4 to this Regulation. Outside this field no sharp variation of colour shall be observed. | **Please see Record No. 06-0158 attached.** | | **YES** |
| **10.** | **TEST PROCEURE** | | | |
| 10.1. | All measurements shall be carried out with a colourless standard filament lamp of the category indicated for the daytime running lamp adjusted to produce the reference luminous flux specified for this category of filament lamp. | **H3 standard bulb used** | | **YES** |
| 10.2. | All measurements, photometric and colorimetric, on lamps equipped with non-replaceable light sources (filament lamps and other) shall be at 6.75 V, 13.5 V or 28.0 V respectively. | | | **N/A** |
| | In the case of light sources supplied by a special power supply, the above test voltages shall be applied to the input terminals of that power supply. The test laboratory may require from the manufacturer the special power supply needed to supply the light sources. | | | **YES** |
| 10.3. | The limits of the apparent surface in the direction of the reference axis of a lightsignalling device shall be determined | | | **YES** |
| **11.** | **HEAT RESISTANCE TEST** | | | |
| 11.1. | The lamp must be subjected to a one-hour test of continuous operation following a warm-up period of 20 minutes. The ambient temperature shall be 23°C+ 5°. The filament lamp used shall be a filament lamp of the category specified for the lamp, and shall be supplied with a current at a voltage such that it gives the specified average power at the corresponding test voltage. However, for lamps equipped with non-replaceable light sources (filament lamps and other), the test shall be made with the light sources present in the lamp, in accordance with paragraph 10.2. of this Regulation. | | | **YES** |
| 11.2. | Where only the maximum power is specified, the test shall be carried out by regulating the voltage to obtain a power equal to 90% of the specified power. The specified average or maximum power referred to above shall in all cases be chosen from the voltage range of 6, 12 or 24 V at which it reaches the highest value; for lamps equipped with non-replaceable light sources (filament lamps and other) the test conditions set in paragraph 10.2. of this Regulation shall be applied. | | | **YES** |

04-Jul-06
UK Approval Authority


Tel:886-4-24061011 Fax:886-4-24060419 E-mail:isoqa@ms12.hinet.net http:www.isoqa.com.tw

11.3. After the lamp has been stabilized at the ambient temperature, no distortion, deformation, cracking or colour modification shall be perceptible. In case of doubt the intensity of light according to paragraph 7. above shall be measured. At that measurement the values shall reach at least 90% of the values obtained before the heat resistance test on the same device. **YES**

04-Jul-06
UK Approval Authority


Tel:886-4-24061011 Fax:886-4-24060419 E-mail:isoqa@ms12.hinet.net http:www.isoqa.com.tw

# MYCARR LIGHTING TECHNOLOGY COMPANY LIMITED

# 新傑汽車用品有限公司

# Information Document

for Initial application to ECE Homologation

of Model Number SJ-285E

| items | Details | | Initial | Extension- | 00 | Remark |
|---|---|---|---|---|---|---|
| 1. | VCA | | | | | |
| 1.1 | Job Number | | EAG076982 | | | |
| 1.2 | Approval Number | | 00 0001 | | | |
| . | | | | | | |
| 2. | Manufacturer | | | | | |
| 2.1 | Name | | MYCARR LIGHTING TECHNOLOGY COMPANY LIMITED | | | |
| 2.2 | Address | | 1, Lane 174, Jung Young Road , Chang Hwa Hsiang , Taiwan , Republic of China | | | |
| 2.3 | Trade name or mark | | SIJ | | | |
| | | | | | | |
| 3. | Product | | | | | |
| 3.1 | Model Number | | SJ-285E | | | |
| 3.2 | Intended functions | Charteristic | | | | |
| | | | | | | |
| 3.2.1 | Daytime Running Lamp (Reg. 87) | Category | RL | | | |
| | | Bulb | H3 12V 55W | | | |
| | | Color of light | White | | | |
| | | Color of lens | Clear | | | |
| | | | | | | |
| | | | | | | |
| | | | | | | |
| | | | | | | |
| | | | | | | |
| | | | | | | |
| | | | | | | |
| | | | | | | |
| | | | | | | |
| | | | | | | |
| 4. | Drawings | | SJ-285E | | | |

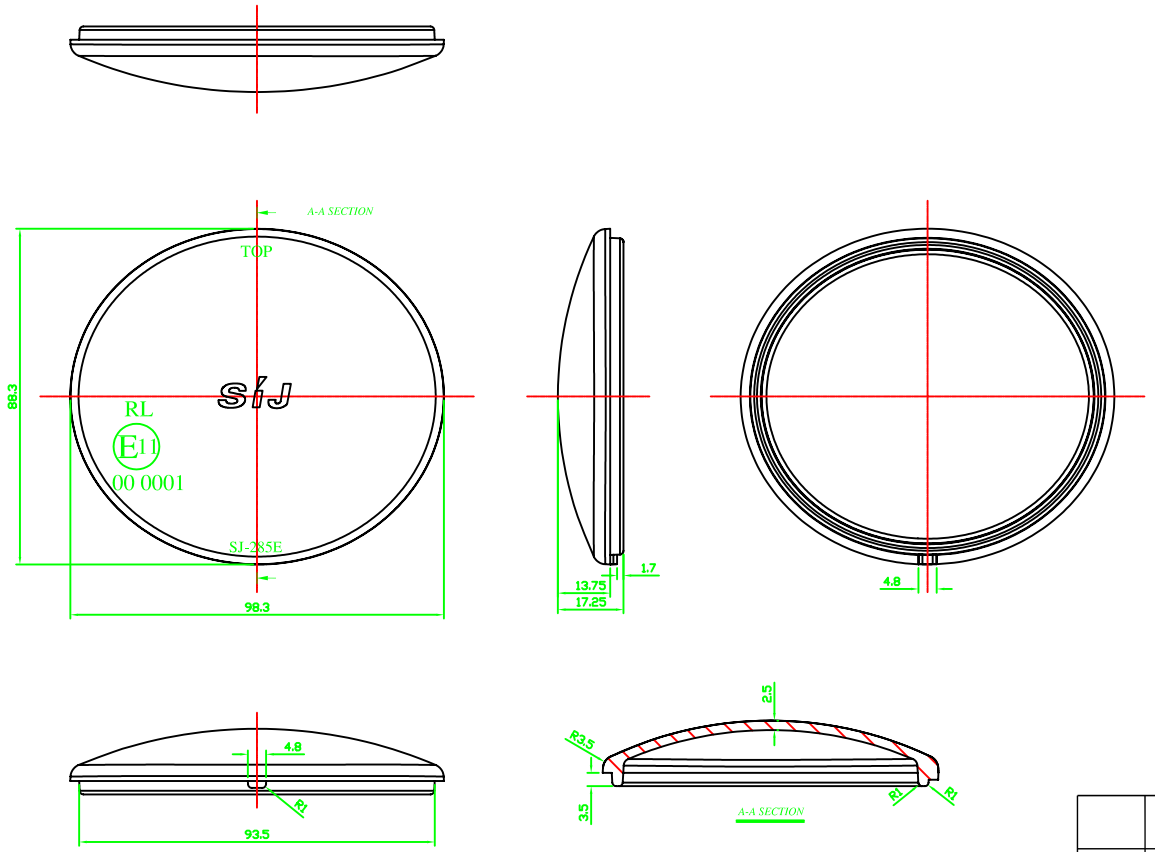


*字高0.3mm
*未標註拔模角1°
*未標註圓角R0.5
*LOGO 及刻字於公模仁

| | | |
|---|---|---|
| | | |
| | | |
| | | |
| 0 | 暫時發行 | 95\02\09 |

| | | | | | | | | | | | |
|---|---|---|---|---|---|---|---|---|---|---|---|
| MYCARR LIGHTING TECH 新傑燈光科技有限公司 MYCARR LIGHTING TECHNOLOGY CO., LTD. | | | | 材質 materials | 玻璃 | 版次 order | 修改事項 modify matter | | | 日期 date | |
| 客戶 customer | | | | 圖名 appellation | LENS | 型號 type number | SJ-285E | 料號 materials number | ****-* | 檔號 archives number | SJ-285-01 |
| 表面 exteriority | 亮面 | 模穴 mold cave | 2 | 審核 examine | | 製圖 draftsman | | 投影 skiagraphy | 第三角法 | 公差 tolerance | 0.5 - 5 ±0.1<br>6 - 20 ±0.12<br>21 - 40 ±0.15<br>41 - 100 ±0.2<br>101 - 200 ±0.125<br>201 - 400 ±0.3 |
| 圖號 graph number | 01 | 數量 amount | 01 | 比例 proportion | 1 : 2 | 單位 module | mm | 日期 date | 95.02.09 | | |

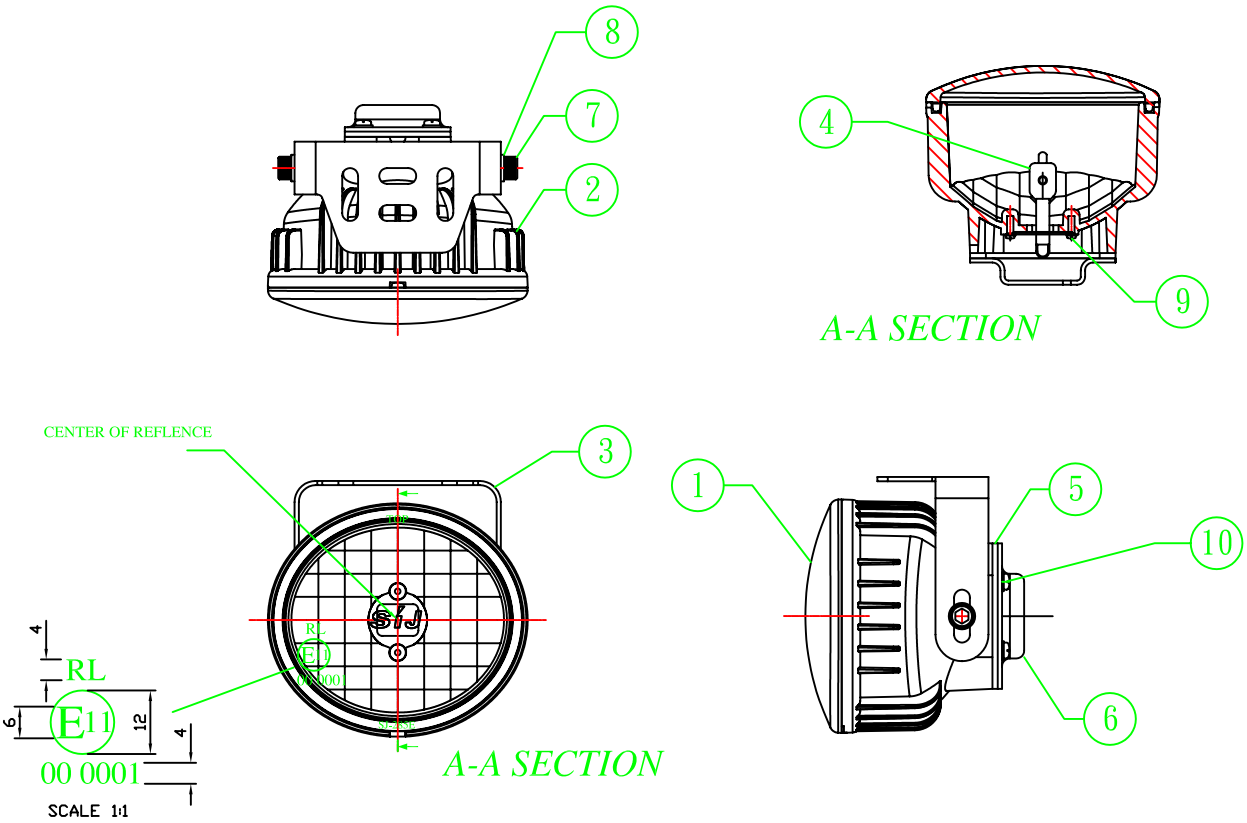


| No | 名稱 | Part no. | Spec. | Material | q'ty | remark |
|---|---|---|---|---|---|---|
| | | | | | | |
| 10 | M3螺絲 | | M3 | XXX | 1 | |
| 9 | M3螺絲 | | M3 | XXX | 2 | |
| 8 | 華司 | | M5 | 鐵 | 2 | |
| 7 | M5內六角螺絲 | | M5 | XXX | 2 | |
| 6 | 後蓋 | | XXXX | 鐵板 | 1 | |
| 5 | 防水墊圈 | | XXXX | 橡膠 | 1 | |
| 4 | H3燈泡 | | XXXX | XXX | 1 | |
| 3 | 鐵腳架 | | XXXX | 鐵 | 1 | |
| 2 | 底座 | | XXXX | 鋁合金 | 1 | |
| 1 | LENS | | XXXX | 玻璃 | 1 | |

| 修訂版次 | 更改位置 | Date | 改訂事項 | Approve |
|---|---|---|---|---|
| | | | | |

| | |
|---|---|
| 製品重量 | |
| 一般公差 | ✓ |
| 第3角法 | |
| 尺度 | 1:4 |
| CAD NAME | 單位 |
| SJ-285E | mm |
| 名稱 NAME | 白晝燈 |
| 番號 PART NO. | SJ-285E |

審 製 日

新傑汽車用品有限公司

Mycarr AUTO ACCESSORIES CO.,LTD.

# MYCARR LIGHTING TECHNOLOGY COMPANY LIMITED
## SJ-285E

| Front View | Rear View |
|---|---|
|  |  |

| Top View | Side View |
|---|---|
|  |  |

# photometric measurements test record

| | | | |
|---|---|---|---|
| Record No. | 06- 0158 | Reference | EAG076982 87 00 0001 |
| Requirement | ECE R.87 Clause7 Annex 3 | Function | Daytime Running Lamp (Reg. 87) |
| Subject | SJ-285E | Date | 8/6/2006 |

Table of standard light distribution

| | | | | | | | |
|---|---|---|---|---|---|---|---|
| 10° | | | 20 | 20 | 20 | | |
| 5° | 10 | 20 | | 70 | | 20 | 10 |
| 0° | 25 | 70 | 90 | 100 | 90 | 70 | 25 |
| 5° | 10 | 20 | | 70 | | 20 | 10 |
| 10° | | | 20 | 20 | 20 | | |
| | 20° | 10° | 5° | 0° | 5° | 10° | 20° |

V

H

| Test point | | minimum | S. 1 | S. 2 | Result | | maximum |
|---|---|---|---|---|---|---|---|
| 10U | 5L | 80 | 460.50 | 530.00 | T | T | 800 |
| 10U | H | 80 | 471.90 | 568.80 | T | T | 800 |
| 10U | 5R | 80 | 470.10 | 537.20 | T | T | 800 |
| 5U | 20L | 40 | 456.50 | 445.70 | T | T | 800 |
| 5U | 10L | 80 | 474.60 | 463.70 | T | T | 800 |
| 5U | V | 280 | 490.50 | 530.40 | T | T | 800 |
| 5U | 10R | 80 | 487.40 | 500.90 | T | T | 800 |
| 5U | 20R | 40 | 460.10 | 462.90 | T | T | 800 |
| H | 20L | 100 | 427.50 | 417.80 | T | T | 800 |
| H | 10L | 280 | 457.10 | 445.50 | T | T | 800 |
| H | 5L | 360 | 455.40 | 445.00 | T | T | 800 |
| H | V | 400 | 465.40 | 473.20 | T | T | 800 |
| H | 5R | 360 | 466.80 | 462.70 | T | T | 800 |
| H | 10R | 280 | 475.60 | 470.60 | T | T | 800 |
| H | 20R | 100 | 452.00 | 446.90 | T | T | 800 |
| 5D | 20L | 40 | 446.40 | 433.30 | T | T | 800 |
| 5D | 10L | 80 | 453.70 | 462.40 | T | T | 800 |
| 5D | V | 280 | 485.70 | 463.10 | T | T | 800 |
| 5D | 10R | 80 | 472.00 | 460.40 | T | T | 800 |
| 5D | 20R | 40 | 459.20 | 464.80 | T | T | 800 |
| 10D | 5L | 80 | 548.80 | 448.70 | T | T | 800 |
| 10D | H | 80 | 562.00 | 454.40 | T | T | 800 |
| 10D | 5R | 80 | 535.60 | 459.10 | T | T | 800 |

Tested by Tung Chou Signature Tung Chou

Approved by Arthur C. H. Chang Signature Arthur Chang

# colors of lights test record

| | | | |
|---|---|---|---|
| Record No. | 06- 0158 | Reference | EAG076982 87 00 0001 |
| Requiremen | ECE R87 Clause8 Annex 4 | Function | Daytime Running Lamp (Reg. 87) |
| Subject | SJ-285E | Date | 8/6/2006 |

| Test point | x | y | x | y |
|---|---|---|---|---|
| HV | 0.4283 | 0.4013 | 0.4310 | 0.4022 |

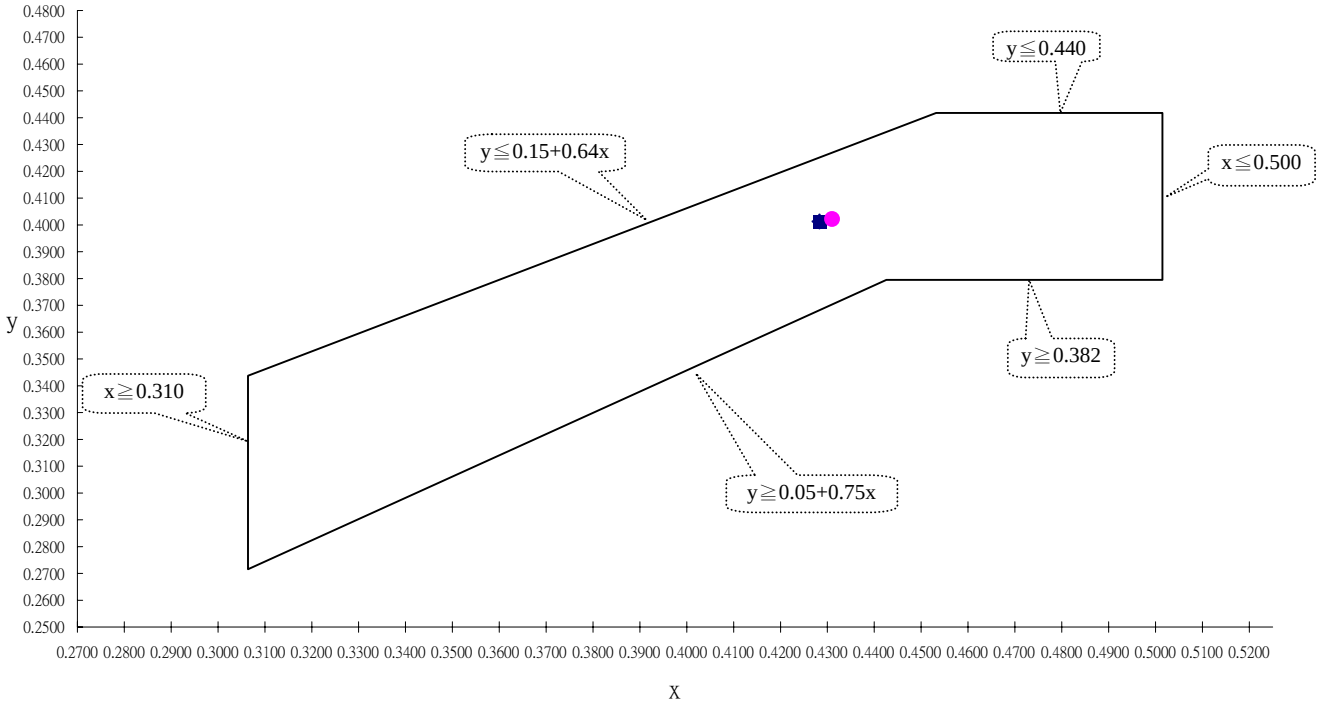


Limit towards blue : $x \geqq 0.310$
Limit towards yellow : $x \leqq 0.500$
Limit towards green : $y \leqq 0.150 + 0.640x$
Limit towards green : $y \leqq 0.440$
Limit towards purple : $y \geqq 0.050 + 0.750x$
Limit towards red : $y \geqq 0.382$

Tested by Tung Chou Signature Tung Chou

Approved by Arthur C. H. Chang Signature Archer Chang